Lecture - 20

Basic Properties of CE stage :-

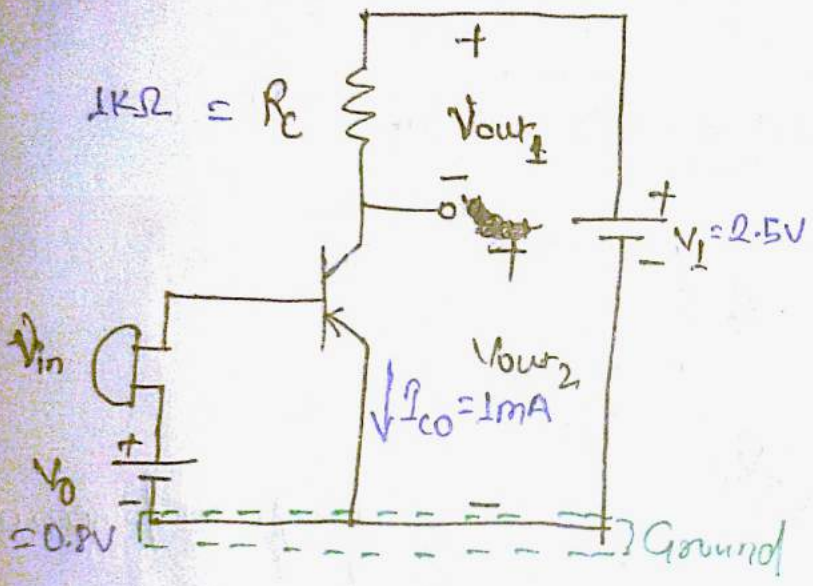

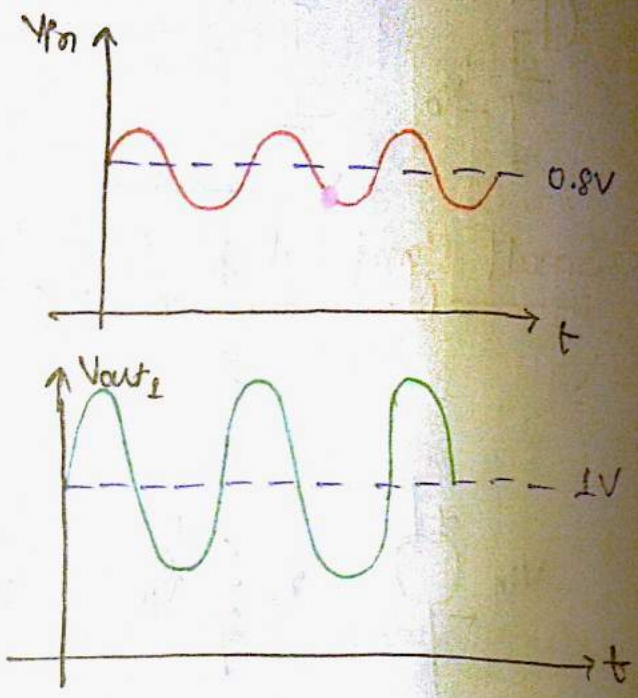

→ Vin has the bias voltage 0.8V in the absence of signal.

→ Vout has the bias voltage 1V in the absence of signal because 1V voltage drop across R_C. The V_{out_1} will have greater magnitude input i.e. amplified voltage.

Scanned by CamScanner

→ The V_{out_1} is not actual output voltage. The V_{out_2} is the actual output voltage.

→ The V_{out_2} is given by

$$V_{out_2} = V_1 - R_C I_{C0} = 1.5V$$

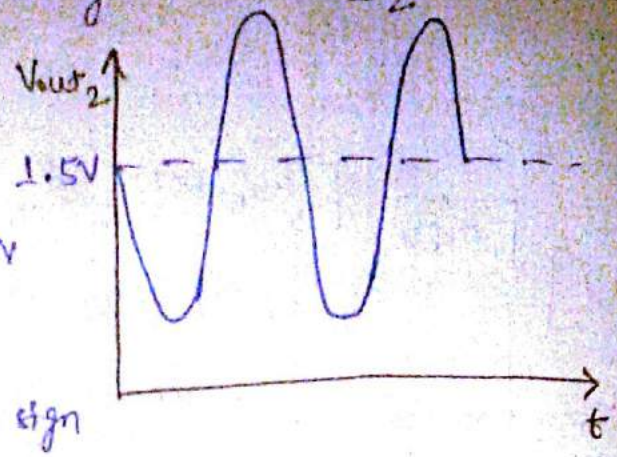

The V_{out_2} has bias voltage 1.5 V. The waveform is flipped because of −ve sign in A_V.

* Simplified Diagram :-

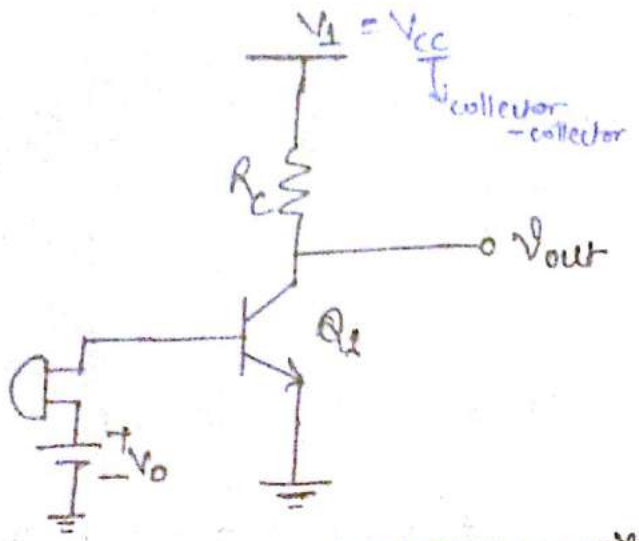

→ Since for finding any voltage we can not define only one we have to find voltage at that point but with respect to some other point

→ In this V_{out} is evaluated with respect to ground.

* Small Signal Voltage Gain Calculation :- (Assume $V_A = \infty$)

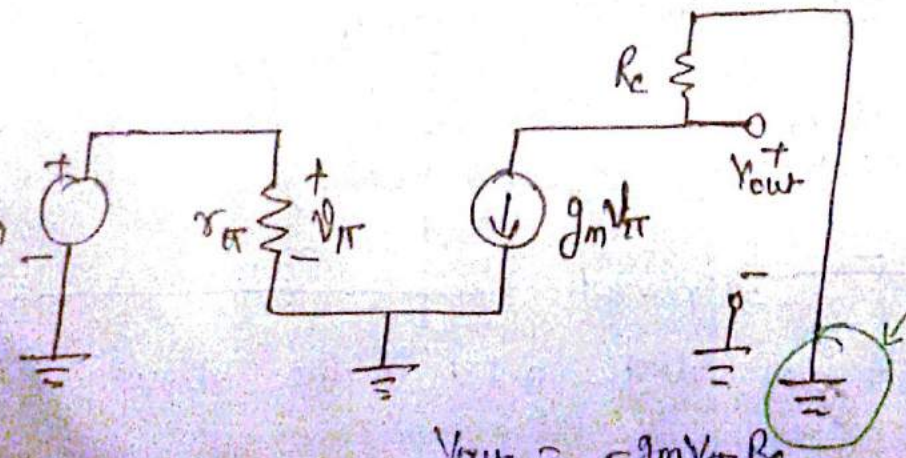

AC ground because of small signal model by S.C. voltage source

$$V_{out} = -g_m V_\pi R_C$$

$\because V_\pi = V_{in}$

$\Rightarrow g_m V_\pi = g_m V_{in}$

$$\Rightarrow V_{out} = -g_m V_{in} R_C$$

Voltage Gain, $\boxed{A_V = \frac{V_{out}}{V_{in}} = -g_m R_C}$

Scanned by CamScanner

ok. $A_V = -g_m \times$ (total resistance tied between the collector and ground)

Example:- For the previous ckt, $g_m = \frac{I_C}{V_T} = \frac{1mA}{26mV} = \frac{1}{26\Omega}$, $R_C = 1k\Omega$

$A_V = -\frac{1000}{26} \simeq -38$

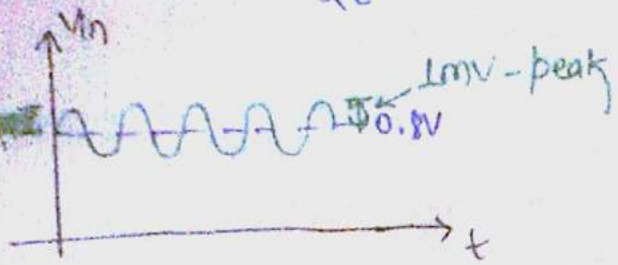

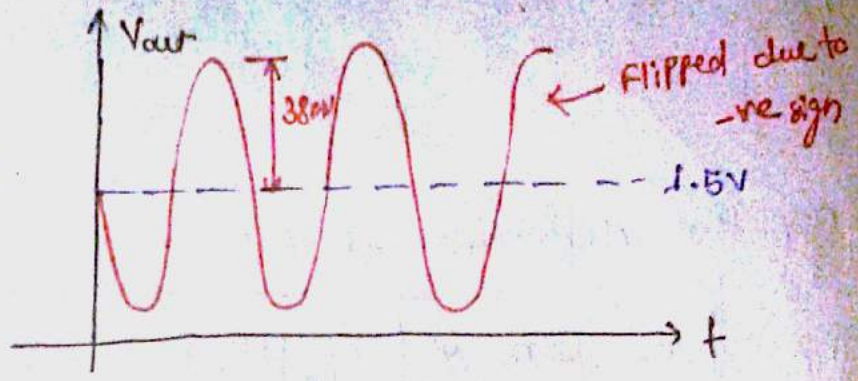

Need to be double the gain:- (i) $R_C \rightarrow 2R_C$

$R_C = 2k\Omega$, $I_C = 1mA$ the bias voltage for Vout will reduce to 0.5V, But we have -76 gain. Due to reduction in bias voltage to 0.5V transistor is in saturation.

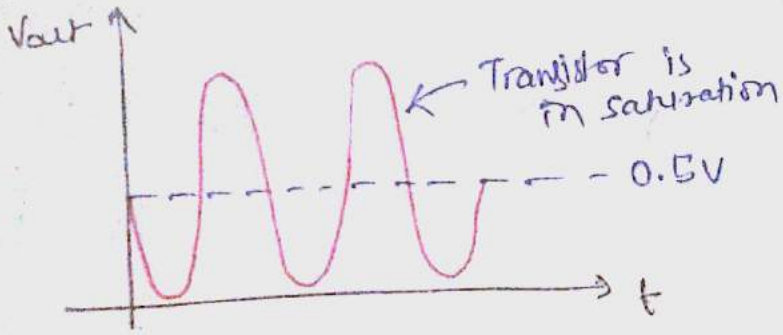

(ii) $g_m \rightarrow 2g_m$

$A_V = -g_m R_C = -\frac{I_C}{V_T} R_C$

If we doubles g_m then I_C doubles hence bias voltage again reduced to 0.5V so transistor go in saturation.

Hence if we doubles either g_m or R_C then $I_C R_C$ product doubles in both conditions. Hence bias voltage reduces.

Scanned by CamScanner

Inclusion of Early Effect :-

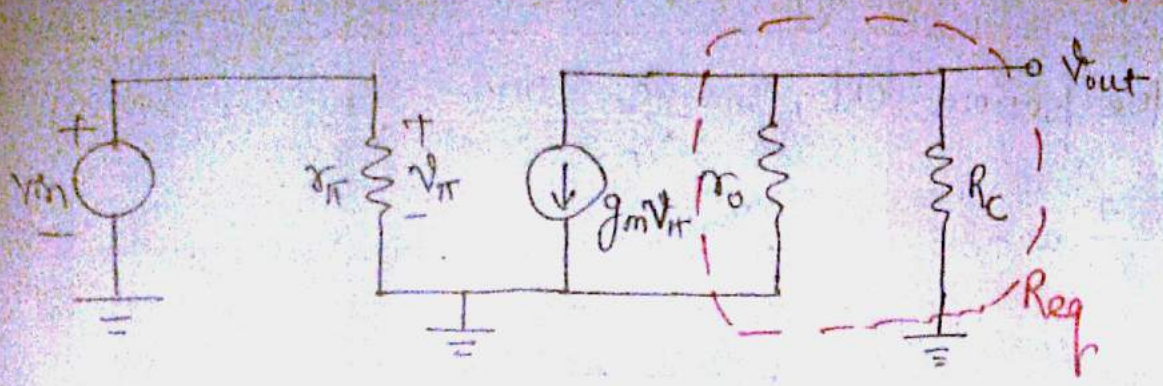

By the definition of A_v

$$\boxed{A_v = -g_m \times (r_o \| R_C) = -g_m R_{eq}}$$

voltage gain due to early effect inclusion.

So by the inclusion of early effect resistance reduces so voltage gain also reduced due to early effect.

Example:

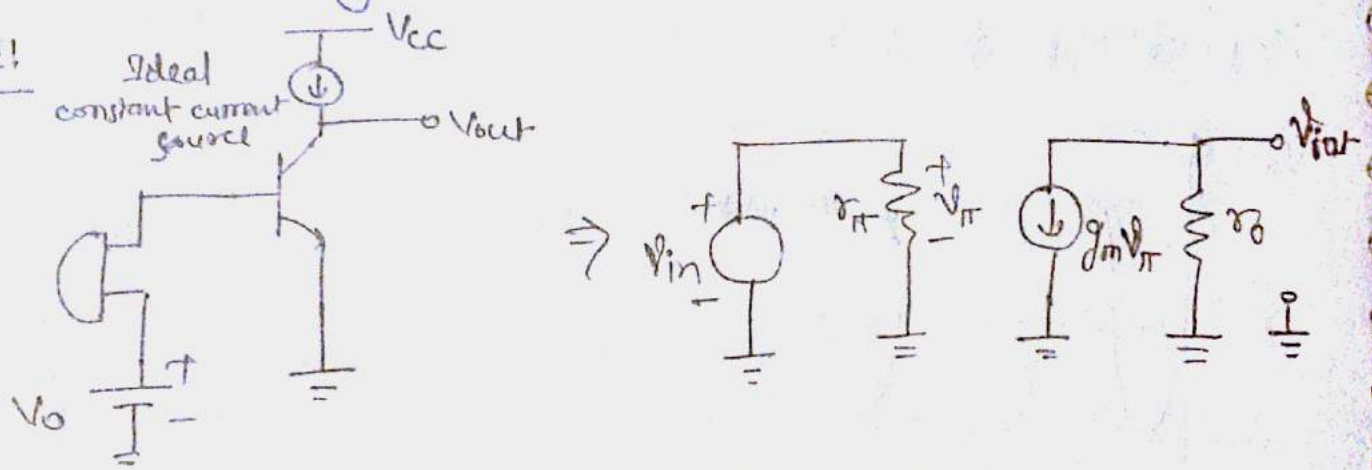

$$A_v = -g_m r_o \qquad [\because R_C = \infty]$$

$$= -\frac{I_C}{V_T} \cdot \frac{V_A}{I_C} = -\frac{V_A}{V_T}$$

$$A_v = -\frac{V_A}{V_T}$$

$g_m r_o$ is intrinsic gain of the transistor.

∴ One transistor can not provide the gain more than this.

Scanned by CamScanner

Lecture - 21

Que:- How do we identify a CE stage?

- Can we apply input to emitter or collector?
- Can we sense the output at the emitter or base?

Example:-

$V_A = \infty$

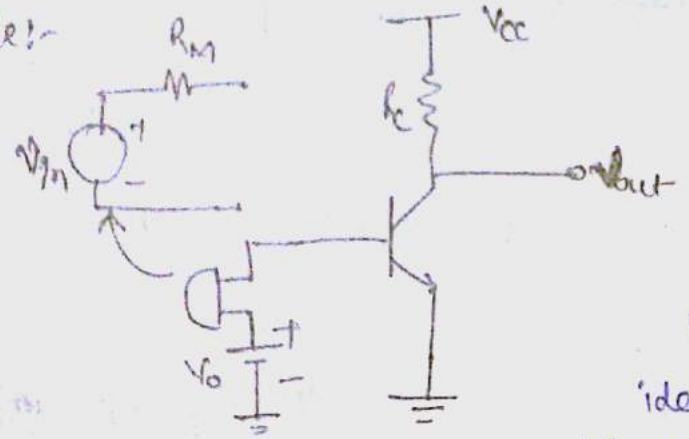

We have assumed microphone as ideal voltage source previously but Microphone has some internal impedance.

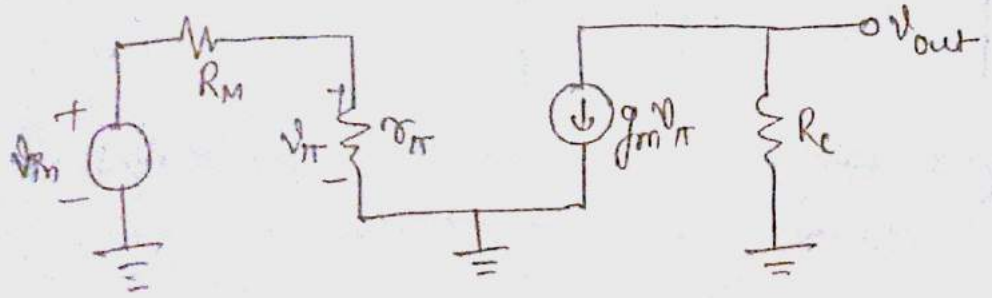

$$v_\pi = \frac{v_{in}\, r_\pi}{R_M + r_\pi}$$

$$\Rightarrow v_{out} = -g_m v_\pi R_c = -g_m R_c \left(\frac{v_{in}\, r_\pi}{r_\pi + R_M} \right)$$

$$\Rightarrow A_v = \frac{v_{out}}{v_{in}} = \left(\frac{-g_m R_c\, r_\pi}{r_\pi + R_M} \right) \qquad \left(\because \frac{r_\pi}{r_\pi + R_M} < 1 \right)$$

Attenuation factor

$A_v \downarrow$

Scanned by CamScanner

→ If R_M is so large then the factor becomes less than 1 so the A_v reduces.

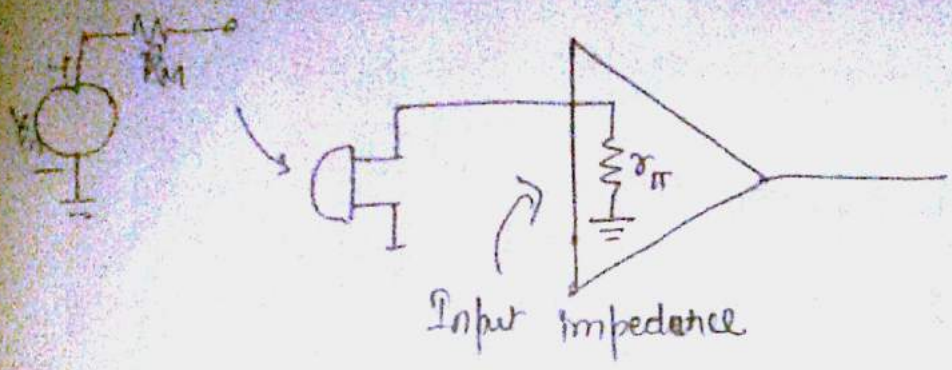

Input impedance:-

The input impedance is impedance at the input port between two terminal.

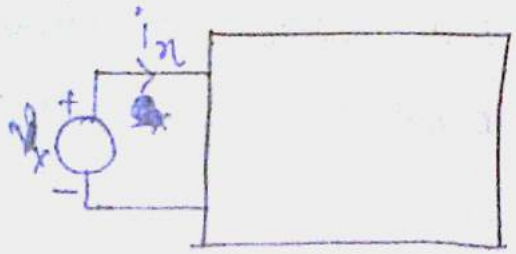

* In previous, input impedance is measured between base and the ground.

* We set all independent sources to zero for calculating input impedance.

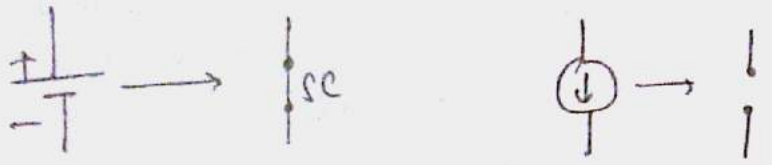

→ Apply a small signal voltage source between the input terminals like V_x. Calculate the current supplied by this voltage source.

$$\Rightarrow R_{in} = \frac{V_{in}}{i_x}$$

* The importance of the input impedance is that if what is driving the circuit for example, microphone does have internal impedance then is the input impedance that causes the attenuation of the signal. So this input impedance must be high so attenuation

Scanned by CamScanner

tutors approaches 1.

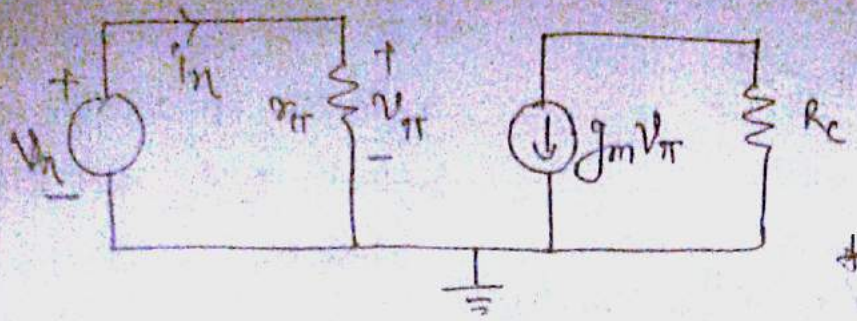

$\because V_x = V_\pi$

$i_x r_\pi = v_\pi = v_x$

$$\boxed{R_{in} = \frac{V_x}{i_x} = r_\pi}$$

* In this if we have so then result does not change so early effect does not affect the input impedance.

* We may conclude that for high gain the input impedance must be high.

Example:

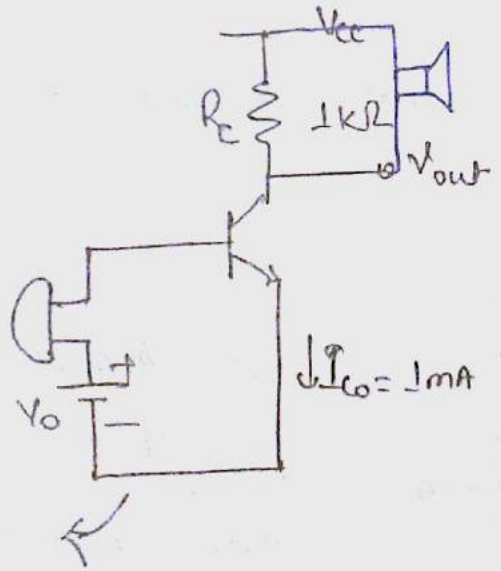

$V_A = \infty$

$A_v = -g_m R_c = -38$

→ The mic creates fluctuation in current and this current creates fluctuation in output voltage

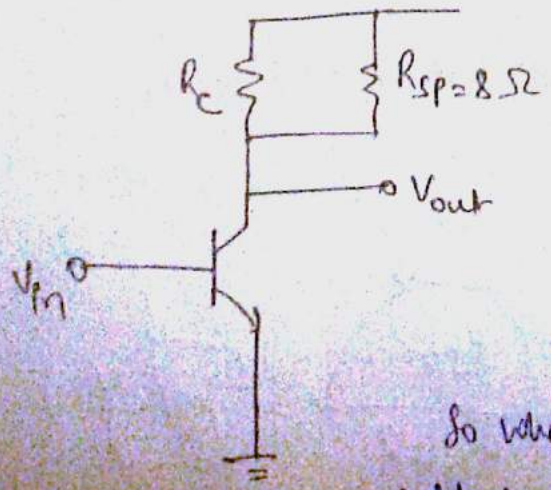

Since $A_v = -g_m \times (R_c \| R_{sp})$

$= -g_m \times (1k\Omega \| 8\Omega)$

$\simeq -0.3$

So when we connect speaker then the gain suddenly went away that is less than -1.

Scanned by CamScanner

Now, when we redesign it with $R_C = 100\Omega$ and $I_C = 10mA$

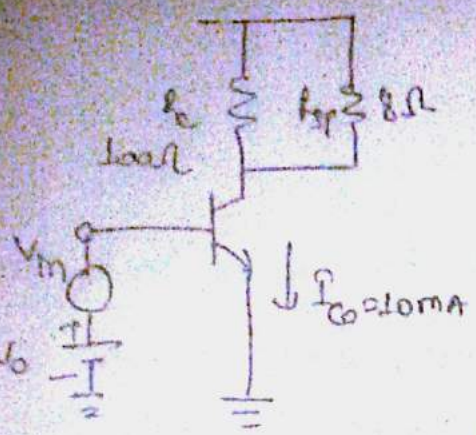

$A_v = -38$

$A_v = -\frac{10}{26\Omega}(100\Omega \| 18\Omega)$

$\simeq -2.8$

* Since R_C is down by a factor of 10 and I_C is up by a factor of 10 so the product $I_C R_C$ does not change.

So suddenly the voltage gain is increased by approximately factor of 10.

* The connection of load changes the gain when the load is not connected.

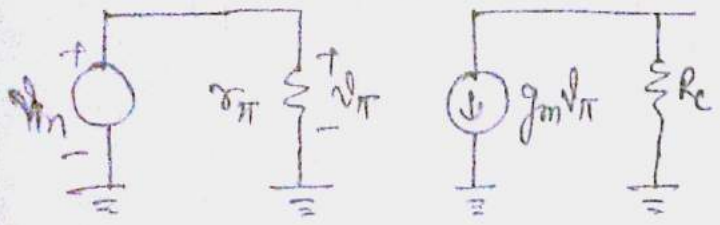

$v_{out} = -g_m R_C v_{in}$ ← Before connecting the load (Thevenin's voltage)

For Thevenin's resistance

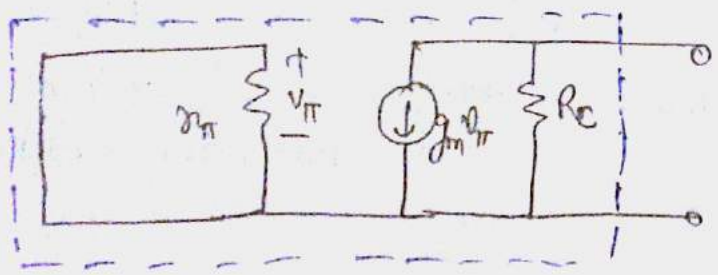

Since $V_t = 0$

$g_m v_\pi = 0$

then current source is OC

Therefore, $R_{th} = R_C$

Thevenin's equivalent ckt is

without the load / Speaker

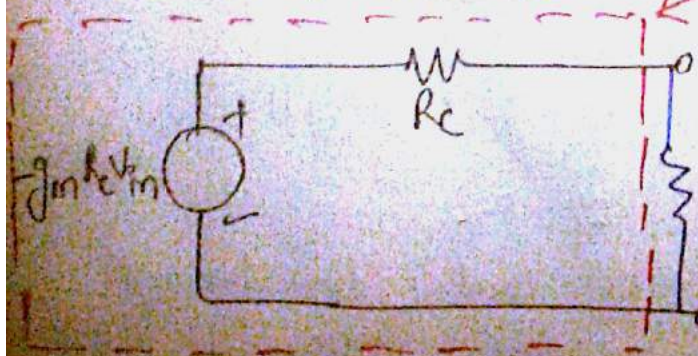

Attenuation factor

-38

$v_{sp} = \frac{R_{sp}}{R_{sp} + R_C} \times (-g_m R_C v_{in})$

Scanned by CamScanner

R_c is nothing just an output impedance of this ckt.

R_{out} Calculation:-

* All independent sources including input voltages source should be zero.

$$\boxed{\frac{v_x}{i_x} = R_{out}}$$

It is just same as Thevenin's resistance.

$$\boxed{R_{out} = R_c}$$ (for basic CE stage)

* If we include the early effect then we have r_o so R_{out} becomes,

$$\boxed{R_{out} = r_o \| R_c}$$

* For higher gain, the output impedance must be low.

Summary:-

$$\boxed{A_v = -g_m (R_c \| r_o)}$$

$$\boxed{R_{in} = r_\pi}$$

$$\boxed{R_{out} = R_c \| r_o}$$

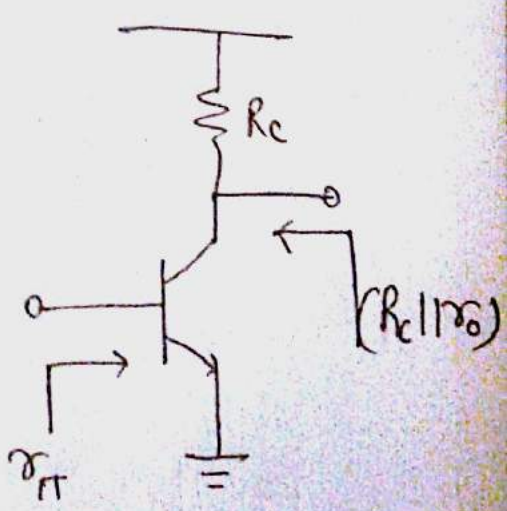

Scanned by CamScanner